CHANGE No	REV	DESCRIPTION	DRAWN	DATE
	01	ORIGINAL	AM	23-07-2025

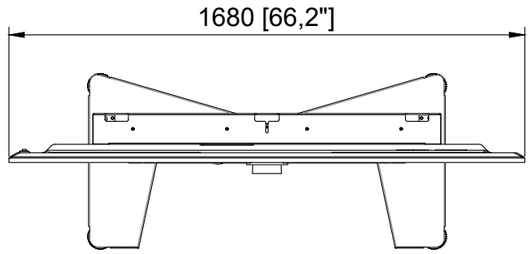

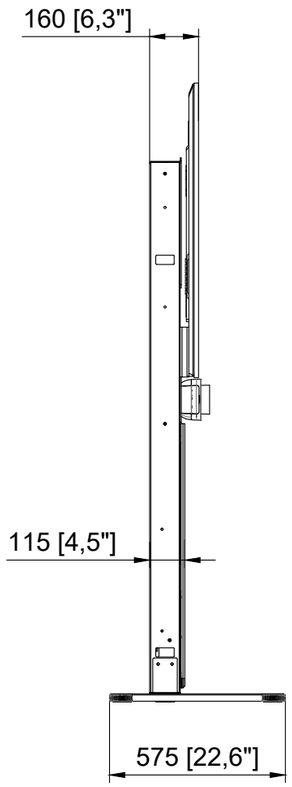

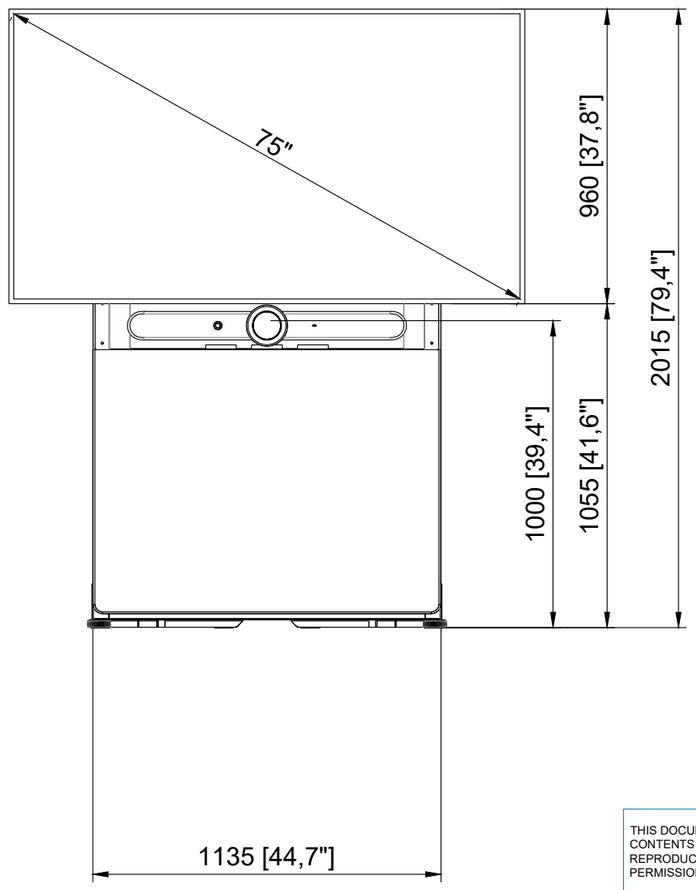

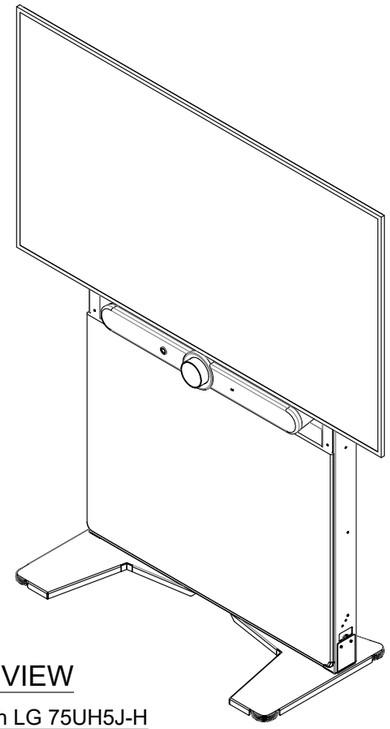

ISOMETRIC VIEW

Model shown with LG 75UH5J-H
and Logitech Rally Bar Below Display

THIS DOCUMENT CONTAINS CONFIDENTIAL INFORMATION. ALL ASPECTS OF ITS CONTENTS ARE PROTECTED BY COPYRIGHT LAW AND MAY NOT BE REPRODUCED IN ANY MANNER, OR FOR ANY PURPOSE, EXCEPT BY WRITTEN PERMISSION OF ASHTON BENTLEY TRADING LIMITED, THE COPYRIGHT HOLDER.

THE ITEMS DETAILED IN THIS DRAWING ARE PROTECTED UNDER SEVERAL PATENTS.

ASHTON BENTLEY TRADING LIMITED
23 SCHOONER PARK, SCHOONER COURT, CROSSWAYS BUSINESS PARK,
DARTFORD, KENT, DA2 6NW UNITED KINGDOM

TITLE: Single75 Freestanding with Camera Below - Overall Dimensions

DRAWN BY:	DATE:
A MESTRE	23-07-2025
APPROVED BY:	DATE:
J DOHERTY-ROWE	23-07-2025

DRAWING NUMBER: OL000418

THIRD ANGLE PROJECTION:

DRAWING SIZE:	DIMENSIONS IN:	SCALE:	SHEET:	REV:
A3	MM [INCHES]	1:25	1 OF 1	01